DC Single-Acting Solenoid in explosion-protected Design ATEX + IECEx

1
Product group

F MM E + F MT X

Function

- Push and pull type

Construction

- Mounting via central thread
- Electrical connection via robust terminal made of metal
- Construction size: 35mm, 45mm, 60mm
- Protection class according to DIN VDE/DIN EN 60529, when properly installed
  - Electrical connection and solenoid body P65
  - Tube IP20
- Integrated circuit with TVS diode
- Explosion protection: Ex II 2G Ex eb mb IIC T6 / T4 Gb
  Ex II 2D Ex tb IIIC T80°C / T130°C Db

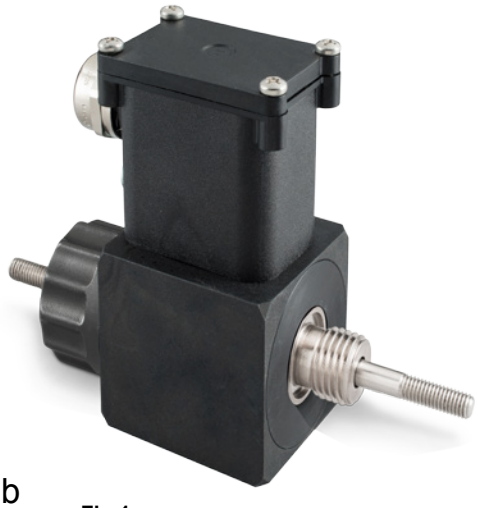

Fig 1:
Linear solenoid ATEX
consisting of magnetic body type F MM E
and tube type F MT X

Application examples

- In explosive atmospheres
  e.g. in chemical companies, Refineries and refueling facilities

Options and accessories

- Protection class solenoid body IP 67
- AC version with bridge rectifier
- Deviating ambient temperatures
- In the framework of our platform for valve solenoids there is a variety of variation possibilities for customer specific requirements. We are pleased to work out your individual solution in a personal meeting.

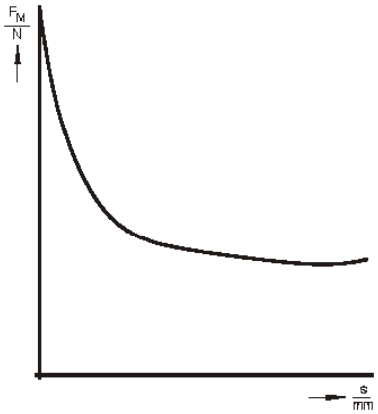

Fig. 2: Force vs. stroke characteristic

Standards and approvals

- Design and testing according to DIN VDE 0580
- Quality management to ISO 9001, DIN EN ISO/IEC 80079-34
- ATEX, IECEx

Technical Data

Size		037	045	063
Operating mode		S1		
rel. duty cycle		100%		
Ambient temperature ϑ_{13}	(°C)	40		
Ambient temperature T_a	(°C)	-30 up to +40		
Temperature classes		T4		
Rated voltage U_N	(VDC)	24 (±10 %)		
Stroke s	(mm)	Magnetic force (N)		
	0	29	59	174
	1	12	27	93
	2	11	22	67
	3	10	19.5	57
	4	9	17	51
	5	8.5	15	46
	6	8.5	15	43
	7	8.5	14	41
	8	9	14	40
	9		14.5	39
	10		15	38
	11			38
	12			41
Rated work W_N	(Ncm)	7.0	15.4	48.6
Rated power P_{20}	(W)	12.1	20.4	30.3
Actuation time t_1	(ms)	160	170	245
Fall time t_2	(ms)	40	50	55
Inductance *	(mH)			
• Armature in stroke start position s_0		767	544	361
• Armature in stroke end position s_{max}		330	317	225
Armature weight m_A	(kg)	0.05	0.05	0.18
Solenoid weight m_M	(kg)	0.6	0.8	1.7

* measured via switch-off energy (according to V1350.5786)

Table 1

Notes on the tables

The magnetic force values indicated in the table refer to 90 % of the rated voltage and normal operating temperature. There may be deviations with other rated voltages.

Due to natural dispersion the magnetic force values may deviate by approx. ± 10 % from the table values.

The normal operating temperature is based on:

a) Mounting on heat-insulating base
b) Rated voltage ⎓ 24 V (other voltages on request)
c) Operating mode S1 (100% ED)
d) Reference temperature 40° C

The times listed in above table refer to rated voltage, max. stroke, weight load of 70 % of rated magnetic force. These values may decrease considerably with higher load.

Rated voltage

Rated voltage is ⎓ 24 V. An adaptation of the exciter coil to a rated voltage less than ⎓ 120 V is possible on request.

Standard values for voltage and operating mode: 24V, S1 (100%).

Protection class, protective conductor connection

The devices correspond to protection class I.

Due to their construction devies with renewable solenoid body do not have a continuous proper protective conductor connection between the protective conductor connector of the solenoid body and the tube.

A proper protective conductor connection of the tube resp. of the connected valve is to be ensured by the user.

For further temperature classes and ambient temperature ranges see part list FMME

Information and remarks concerning European directives can be taken from the correspondent information sheet which is available under *Produktinfo.Magnet-Schultz.com*.

For the magnetic body please observe the respective operating manual delivered with each device. An EC conformity declaration of the manufacturer is attached to every delivery one time.

Please make sure that the described devices are suitable for your application. Our offers for these devices are based on the assumption of maximal 8 in an FMEA severity table, i. e. in case of malfunction of the device model as offered, there is, amongst others, no jeopardy of life or limb.

For this application please note DIN EN 60079-14.

This part list is a document for technically qualified personnel.

The present publication is for informational purposes only and shall not be construed as mandatory illustration of the products unless otherwise confirmed expressively.

Solenoid body

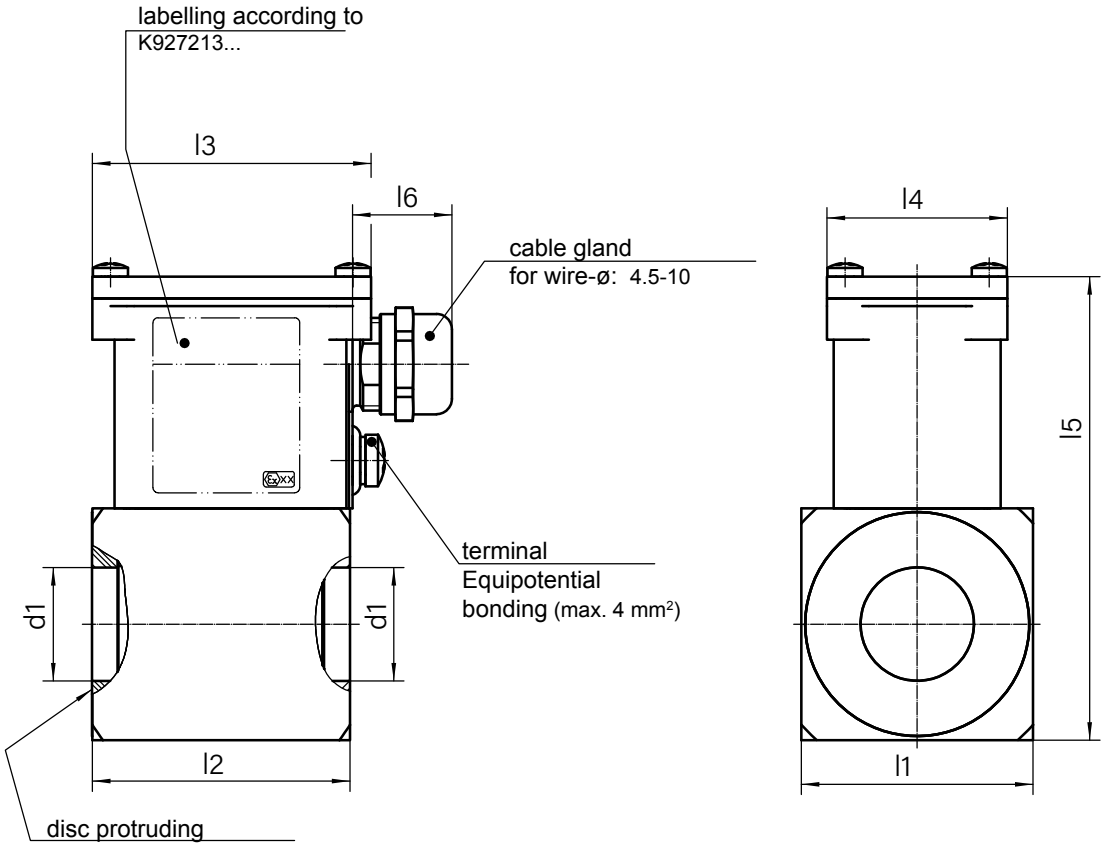

Circuit diagram

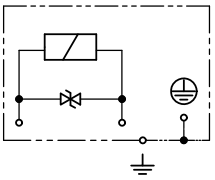

Size	035	045	060
Material no.	927213	927214	927215
	Dimensions in mm / electrical data see table 1		
d1	Ø 19	Ø 22 *	Ø 31
l1	□35	□45	□60
l2	50	50	72
l3	54	54	54
l4	35	35	35
l5	80	90	105
l6	max.22,5	max.22,5	max.22,5

* Variants with ø19 mm and ø23 mm on request

Table 2

Tube

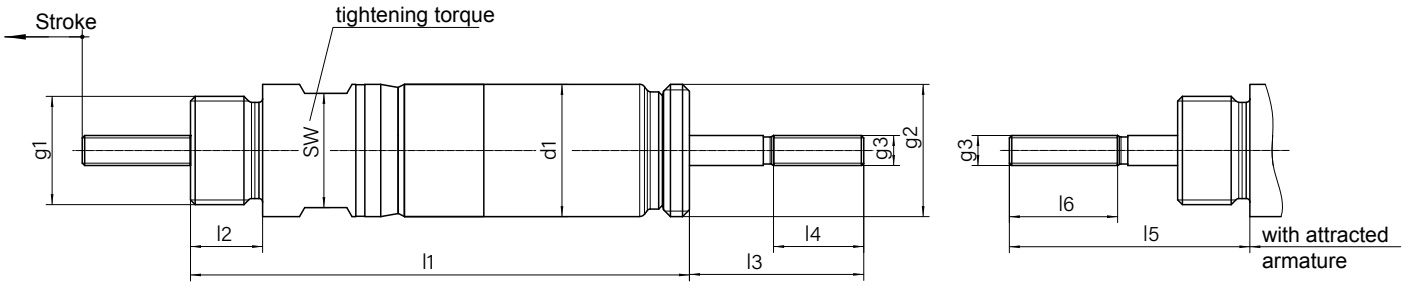

Size	035 / 037	045	060 / 063
Material no.	927732	927764	927177
	Dimensions in mm		
d1	Ø 19	Ø 22	Ø 31
l1	80,1	83	113
l2	12	12	12
l3	22,9	29	32,5
l4	15	15	18
l5	37 ±0,1	40 ±0,1	45 ±0,15
l6	15	18	21
Stroke	8	10	12
SW	SW17	SW19	SW27
Tightening torque (Nm)	13 up to 15	22 up to 24	46 up to 48
g1	M14x1,5	M18x1,5	M27x1,5
g2	M18x1,5	M22x1,5	M30x1,5
g3	M4	M5	M6

Table 3

Fastening nut

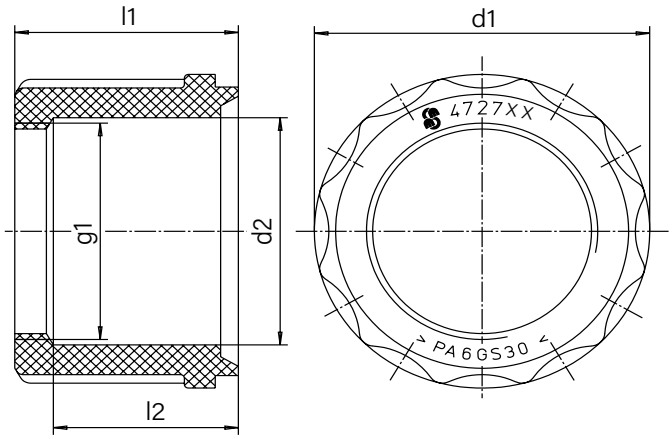

Size	035 / 037	045	060 / 063
Material no.	472793	472778	472794
	Dimensions in mm		
d1	Ø 30 ±0.3	Ø 35	Ø 43.5
d2	Ø 19.5 ±0.2	Ø 23.3 ±0.1	Ø 31.5
l1	20	21	29
l2	15	15	24
g1	M18x1.5	M22x1.5	M30x1.5

Table 4

Single-acting solenoid complete

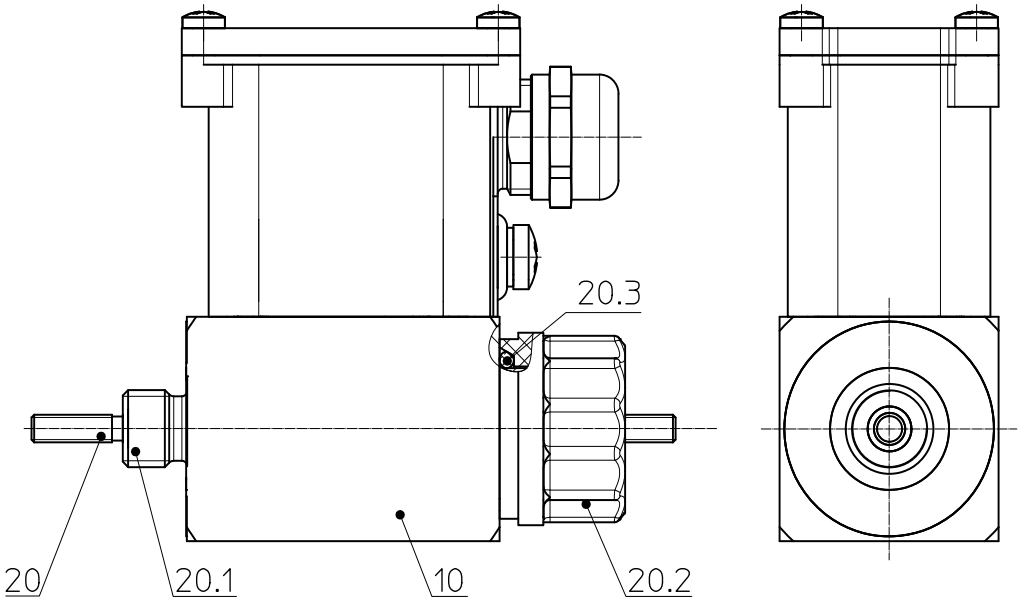

circuit diagram

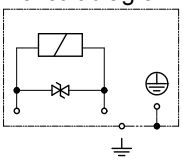

Size	Pos.	Designation	Material no.	Designation 2	Remark
035	**10**	**Solenoid body F MM E 035 K01 A01**	**927213 001**	**24VDC, T4, -30°C ... +40°C**	**Order description** for complete unit please order pos. 10 + 20
	20	**Tube complete FMTX037**	**902361**	**bagged**	
	20.1	Tube FMTX037	927732		Supplied as tube compl. (included in Pos. 20)
	20.2	Fastening nut	472793	Suitable socket wrench SW26 (12 kt DIN 3124) Tightening torque 5+1 Nm	
	20.3	O-ring	781754	19x2,5 70 Sh-A NBR	
045	**10**	**Solenoid body F MM E 045 K01 A01**	**927214 001**	**24VDC, T4, -30°C ... +40°C**	**Order description** for complete unit please order pos. 10 + 20
	20	**Tube complete FMTX045**	**902362**	**bagged**	
	20.1	Tube FMTX045	927764		Supplied as tube compl. (included in Pos. 20)
	20.2	Fastening nut	472778	Suitable socket wrench SW30 (12 kt DIN 3124) Tightening torque 6^{+1} Nm	
	20.3	O-ring	781744	22x2,5 70 Sh-A NBR	
060	**10**	**Solenoid body F MM E 060 K01 A01**	**927215 001**	**24VDC, T4, -30°C ... +40°C**	**Order description** for complete unit please order pos. 10 + 20
	20	**Tube complete FMTX063**	**902360**	**bagged**	
	20.1	Tube FMTX063	927177		Supplied as tube compl. (included in Pos. 20)
	20.2	Fastening nut	472794	Suitable socket wrench SW38 (12 kt DIN 3124) Tightening torque 6^{+1} Nm	
	20.3	O-ring	781755	31x2,5 70 Sh-A NBR	

Table 5

Example

Please note that for a functional unit always a combination of solenoid body and tube must be ordered.

Solenoid body	Designation:	Solenoid body F MM E 035 K01 A01
	Material no.:	927213 001
	Rated voltage:	24 VDC
	Ambient temperature range:	-30°C ….. + 40°C
	Temperature class:	T4
Tube	Designation:	F MT X 037
	Material no.:	902361

Specials designs

Please do not hesitate to ask for our assistance with the solution of your application-oriented task. In order to find rapidly a reliable solution we need complete details about your application conditions. The details should be specified as precisely as possible in accordance with the relevant -Technical Explanations.

If necessary, please request the support of our corresponding technical office.